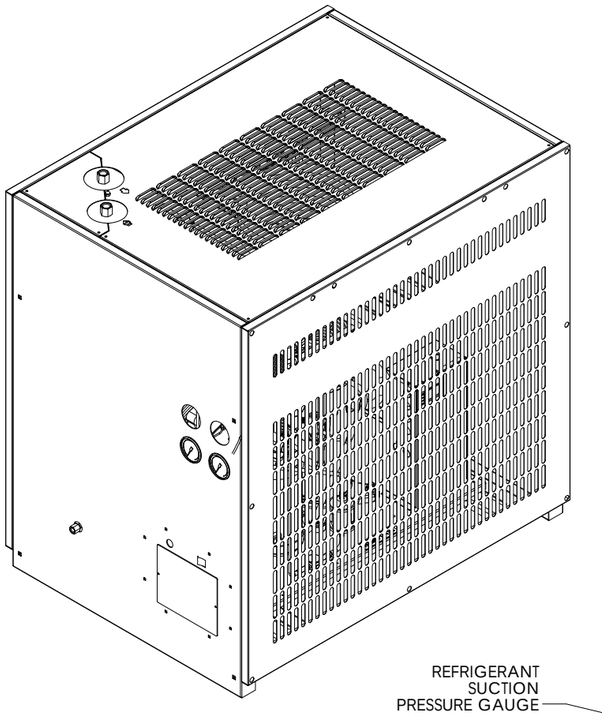

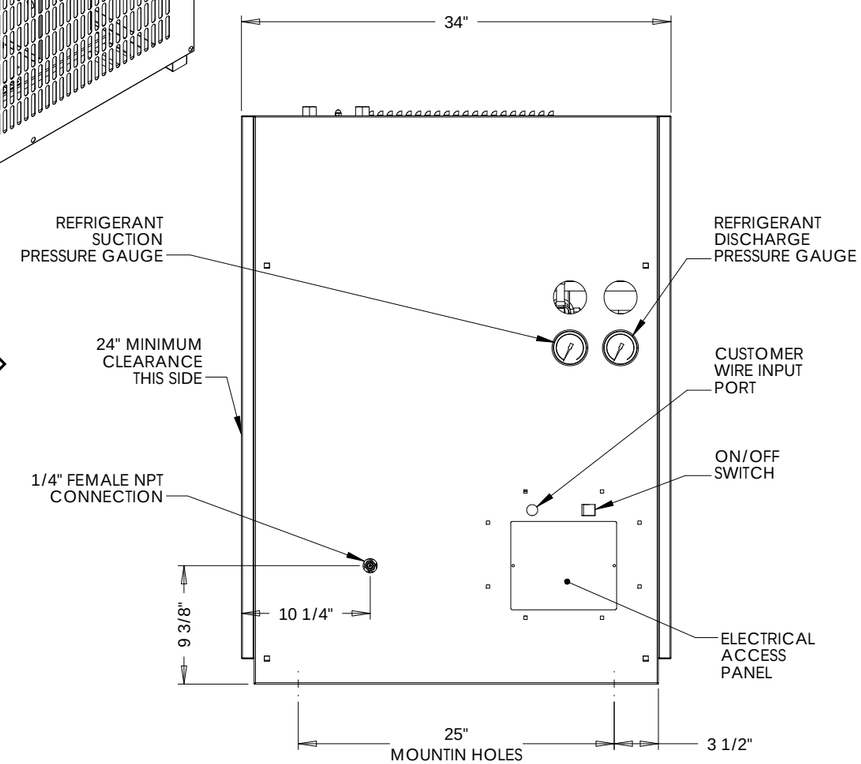

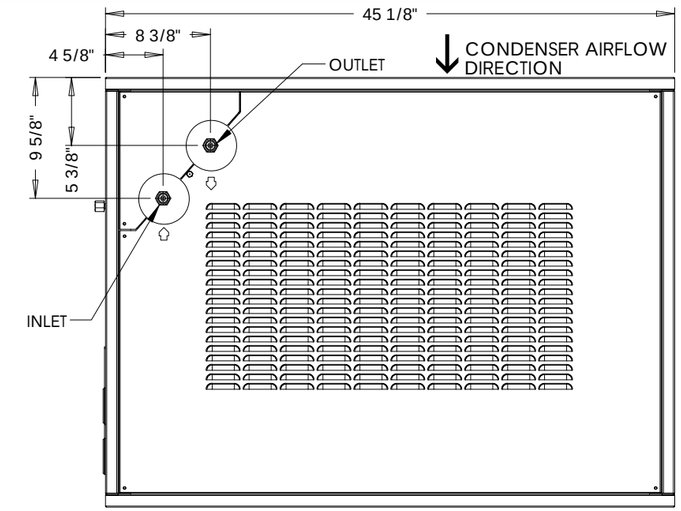

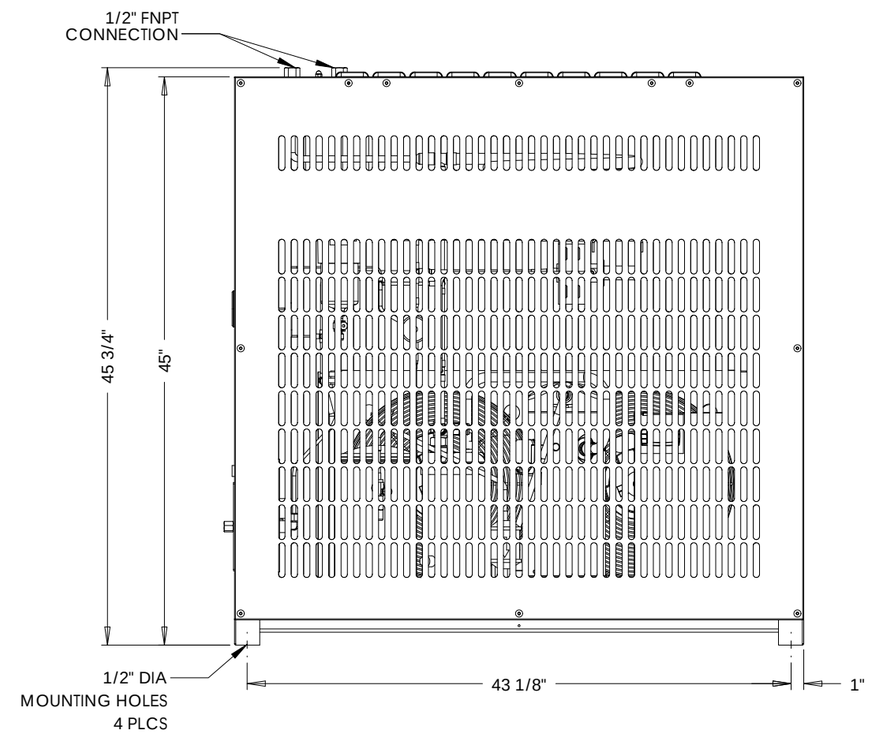

NOTES:

DO NOT INSTALL OR OPERATE THIS EQUIPMENT UNTIL HAVING READ AND UNDERSTOOD THE INSTRUCTIONS AND WARNINGS LISTED IN THE INSTALLATION AND OPERATION MANUAL

THIS PRINT IS NOT CERTIFIED FOR CONSTRUCTION PURPOSES. THIS DOCUMENT IS SUBJECT TO CHANGE WITHOUT NOTICE.

PROPRIETARY AND CONFIDENTIAL

THE INFORMATION CONTAINED IN THIS DRAWING IS THE SOLE PROPERTY OF AIRCEL LLC. ANY REPRODUCTION IN PART OR AS A WHOLE WITHOUT THE WRITTEN PERMISSION OF AIRCEL LLC IS PROHIBITED.

UNLESS OTHERWISE SPECIFIED:

DIMENSIONS ARE IN INCHES
TOLERANCES:
FRACTIONAL ± 0.125
ANGULAR: ±0.5°
TWO PLACE DECIMAL ± .03
THREE PLACE DECIMAL ± .003

THIRD ANGLE PROJECTION

MATERIAL

FINISH

DO NOT SCALE DRAWING

	NAME	DATE
DRAWN	BH	10/13/15
CHECKED	JJ	10/13/15
ENG APPR.		
MFG APPR.		
Q.A.		

COMMENTS:

Aircel
COMPRESSED AIR AND GAS PRODUCTS
323 CRISP CIRCLE
MARYVILLE TENNESSEE 37801
PHONE: 865-681-7066
FAX: 865-681-7069

TITLE: AXHP-275-1200, DRYER, REFRIGERATED, HIGH PRESSURE

SIZE	DWG. NO.	REV
B	AG9984540	1

SCALE: 1:10 WEIGHT: SHEET 1 OF 1